RECOMMEND PCB PATTERN

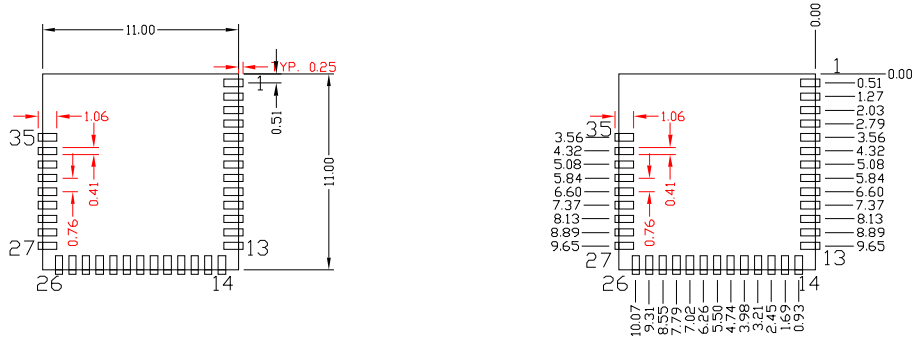

REVISIONS			
REV	DESCRIPTION	DATE	APPROVED
0.1	INITIAL RELEASE	WW1930	
0.2	CHANGE ANTENNA AREA DIMENSION	WW1950	
0.3	CHANGE PAD NAME	WW1950	

MODULE PAD ASSIGNMENT:

PAD1:GND	PAD21:XTALI_32K
PAD2:VDD	PAD22:XTALO_32K
PAD3:P32	PAD23:P8
PAD4:XRES	PAD24:P15
PAD5:P27	PAD25:P6
PAD6:P37	PAD26:GND
PAD7:P29	PAD27:P4
PAD8:P26	PAD28:P28
PAD9:P0	PAD29:UART_CTS_N
PAD10:P1	PAD30:UART_RTS_N
PAD11:P13	PAD31:HOST_WAKE
PAD12:P10	PAD32:UART_RXD
PAD13:P12	PAD33:UART_TXD
PAD14:P11	PAD34:DEV_WAKE
PAD15:P9	PAD35:GND
PAD16:P14	
PAD17:P17	
PAD18:P5	
PAD19:P2	
PAD20:P3	

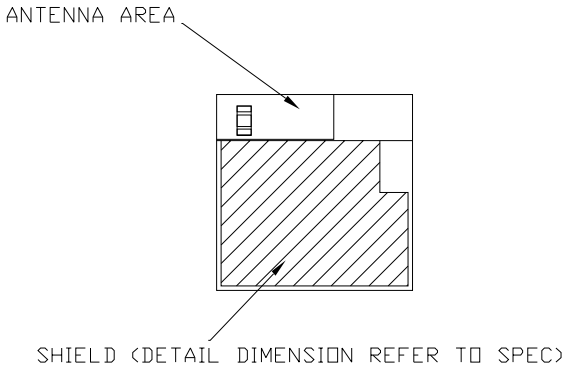

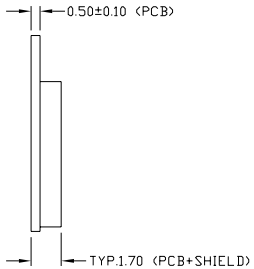

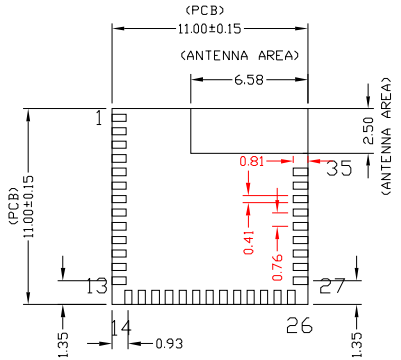

SEEN FROM TOP

SEEN FROM SIDE

SEEN FROM BOTTOM



SCALE 1:1

UNLESS OTHERWISE SPECIFIED	SIGNATURES	DATE
DIMENSIONS ARE IN MM	DRAWN:	WW1950
TOLERANCES ON;	CHECKED	
+/- 0.15 MM	ENGRG	
ANGLES +/-0.5 DEGREE	ISSUED	

CYPRESS SEMICONDUCTOR Corp.

CYBT-223058/253059-02

SIZE	REV NO	DWG NO
	0.3	

SCALE 5:1 | THE 3RD PROJECTION | SHEET: 1 OF 1

HOST PCB KEEP OUT AREA AROUND ANTENNA

1. TO PLACE THE BLE MODULE AT THE EDGE OF THE HOST BOARD.
2. KEEP OUT THE HOST BOARD ON ALL LAYERS.
3. ADDITIONAL KEEP OUT TO COVER COMPLETE MODULE AREA WILL HAVE THE BEST RF PERFORMANCE/DISTANCE.

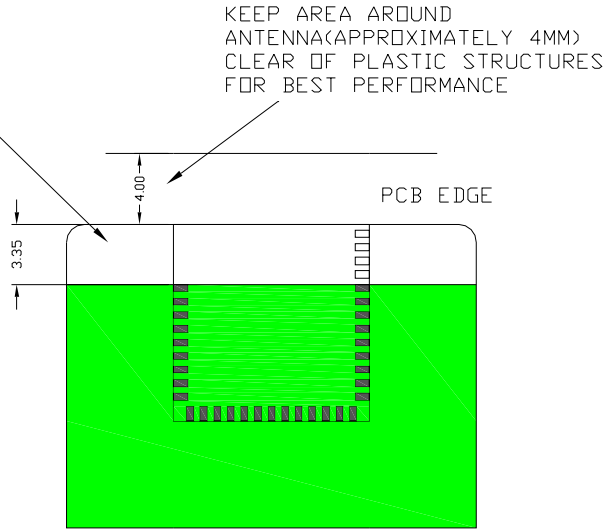

PAD DIMENSION

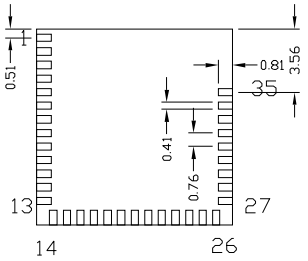

Solder Pad (Center of Pad)	Location (X,Y) from Orign (mm)	Dimension from Orign (mil)
1	(0.28, 0.51)	(11.02, 20.08)
2	(0.28, 1.27)	(11.02, 50.00)
3	(0.28, 2.03)	(11.02, 79.92)
4	(0.28, 2.79)	(11.02, 109.84)
5	(0.28, 3.56)	(11.02, 140.16)
6	(0.28, 4.32)	(11.02, 170.08)
7	(0.28, 5.08)	(11.02, 200.00)
8	(0.28, 5.84)	(11.02, 229.92)
9	(0.28, 6.60)	(11.02, 259.84)
10	(0.28, 7.37)	(11.02, 290.16)
11	(0.28, 8.13)	(11.02, 320.08)
12	(0.28, 8.89)	(11.02, 350.00)
13	(0.28, 9.65)	(11.02, 379.92)
14	(0.93, 10.72)	(36.61, 422.05)
15	(1.69, 10.72)	(66.54, 422.05)
16	(2.45, 10.72)	(96.46, 422.05)
17	(3.21, 10.72)	(126.38, 422.05)
18	(3.98, 10.72)	(156.69, 422.05)
19	(4.74, 10.72)	(186.61, 422.05)
20	(5.50, 10.72)	(216.54, 422.05)
21	(6.26, 10.72)	(246.46, 422.05)
22	(7.02, 10.72)	(276.38, 422.05)
23	(7.79, 10.72)	(306.69, 422.05)
24	(8.55, 10.72)	(336.61, 422.05)
25	(9.31, 10.72)	(366.53, 422.05)
26	(10.07, 10.72)	(396.46, 422.05)
27	(10.72, 9.65)	(422.05, 379.92)
28	(10.72, 8.89)	(422.05, 350.00)
29	(10.72, 8.13)	(422.05, 320.08)
30	(10.72, 7.37)	(422.05, 290.16)
31	(10.72, 6.60)	(422.05, 259.84)
32	(10.72, 5.84)	(422.05, 229.92)
33	(10.72, 5.08)	(422.05, 200.00)
34	(10.72, 4.32)	(422.05, 170.08)
35	(10.72, 3.56)	(422.05, 140.16)

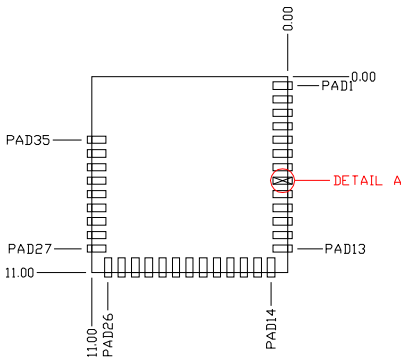

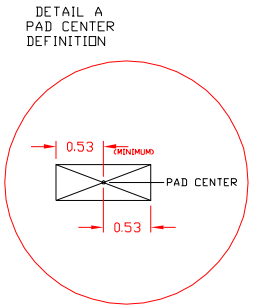

UNLESS OTHERWISE SPECIFIED	SIGNATURES	DATE
DIMENSIONS ARE IN MM TOLERANCES ON; +/- 0.20 MM ANGLES +/-0.5 DEGREE	DRAWN:	WW1950
	CHECKED	
	ENGRG	
	ISSUED	

CYPRESS SEMICONDUCTOR Corp.

CYBT-223058/253059-02

SIZE	REV NO	DWG NO
	0.3	

SCALE 5:1 | THE 3RD PROJECTION | SHEET: 2 OF 2